DTMF BASED HOME AUTOMATION

Overview

- Introduction
- Block Diagram
- Hardware Requirements
- Advantages
- Disadvantages
- Future Work
- References

Introduction

- Design a system that allows users, upon authentication, to remotely control multiple home appliances using a cell phone-based interface.

- Controlling of home appliances using Dual Tone Multi Frequency (DTMF) technology.

DTMF (Dual Tone Multi Frequency)

- A signaling system for identifying the keys or better says the number dialed on a push button or DTMF keypad.
- A multi-frequency tone dialing system used by the push button keypads in phone and mobile sets to conveys the number or key dialed by the caller.
- DTMF has enabled the long distance signaling of dialing numbers in voice frequency range over telephone lines.
- DTMF as name suggests uses a combination of two sine waves tones to represent a key.

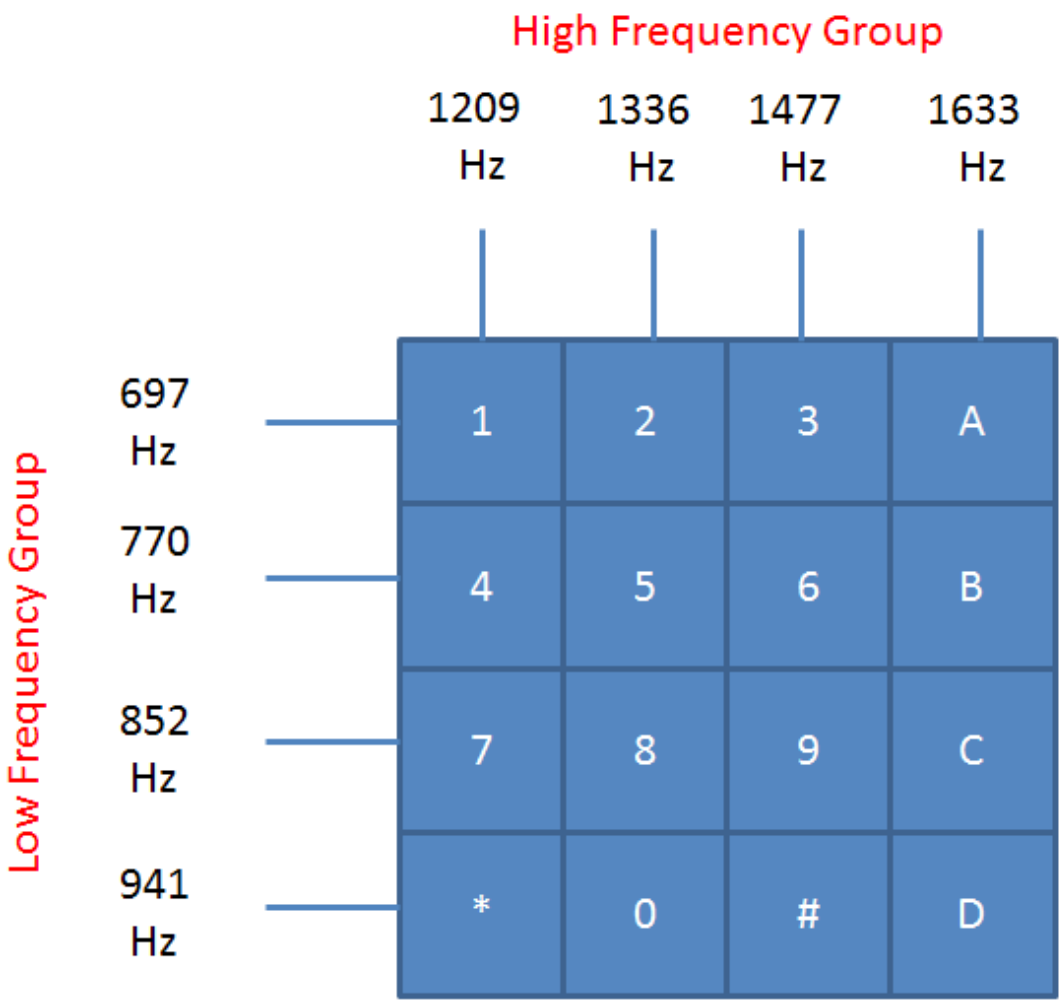
High Frequency Group
1209 Hz
1336 Hz
1477 Hz
1633 Hz
Low Frequency Group
697 Hz
770 Hz
852 Hz
941 Hz
1
2
3
A
4
5
6
B
7
8
9
C
*
0
#
D

Block Diagram

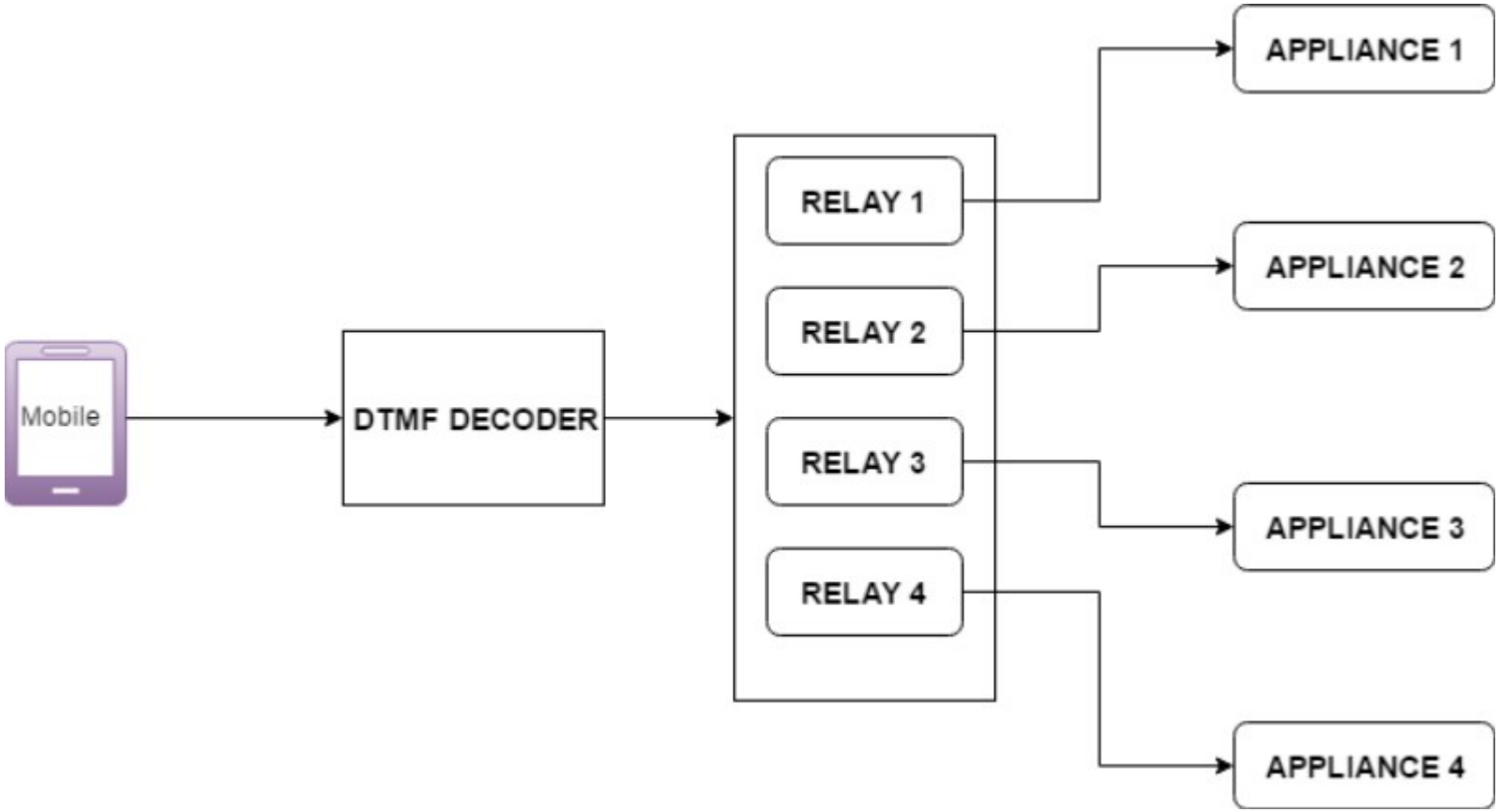

Hardware requirements

- Mobile Phones
- DTMF Decoder Module- HT9170D
- 12V Relay
- Relay driver - ULN2003
- Power Supply

DTMF Decoder-HT9170D

- Operating voltage: 2.5V~5.5V
- Minimal external components
- No external filter is required
- Low standby current
- Excellent performance
- Tristate data output for MCU interface
- 3.58MHz crystal or ceramic resonator
- 18-pin SOP package

Relay

- Relay is basically an electromagnetic switch which can be turned on and off by an applying the voltage across its contacts.

- In this project a 12V 4-channel relay is used.

How Relay Works?

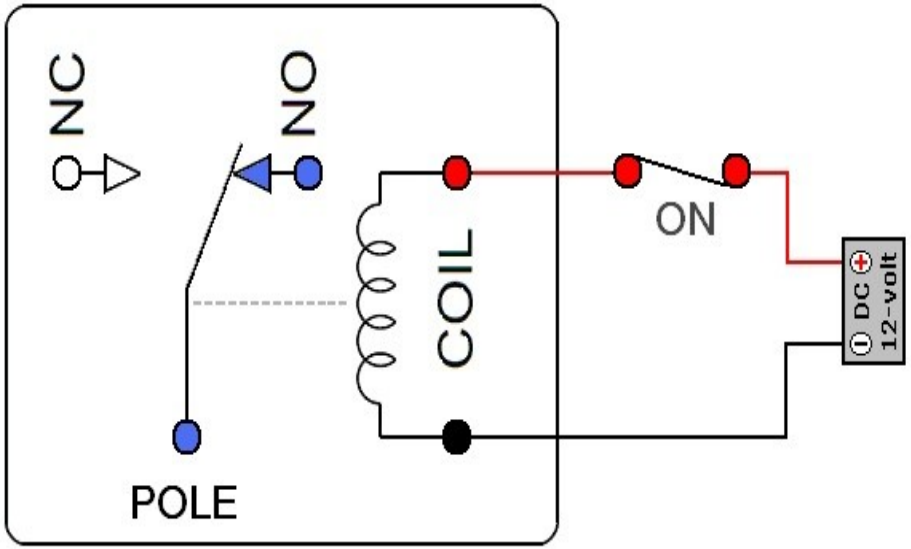

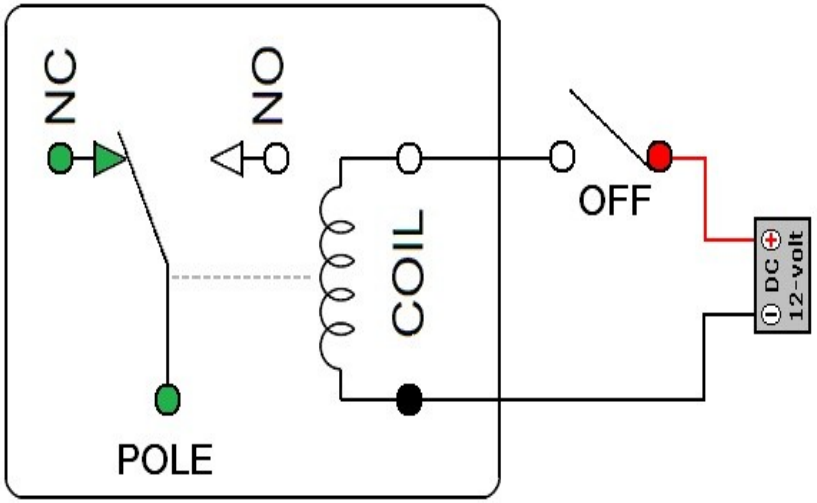

Relay Driver(ULN2003)

Pin configuration

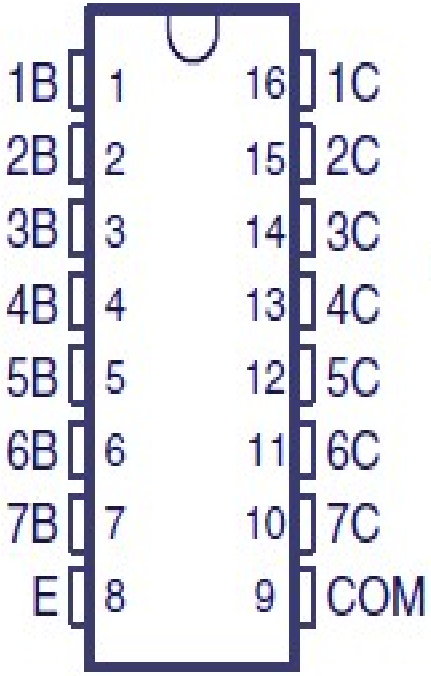

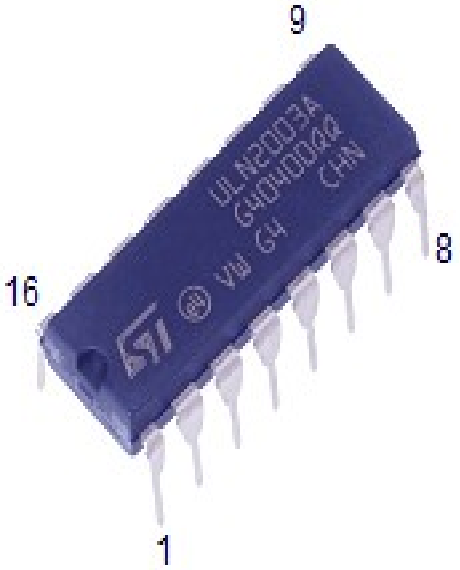

Logic diagram

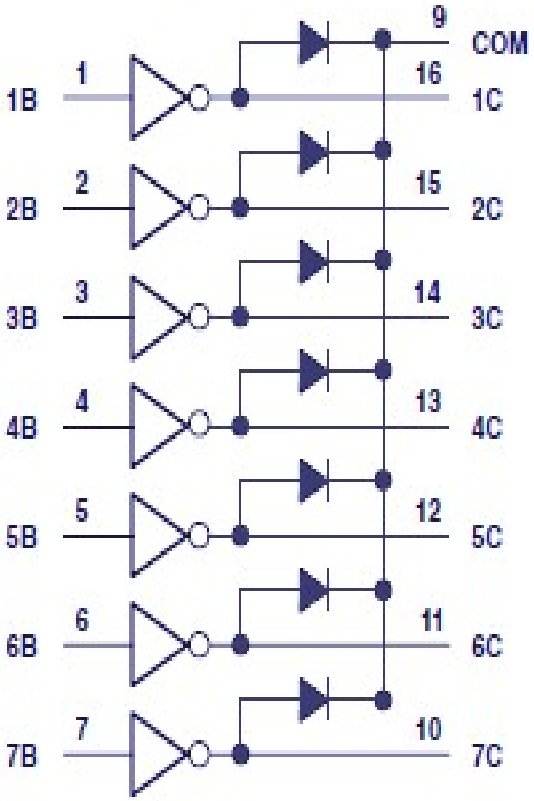

ULN2003A driver IC pin configuration and internal logic diagram

www.circuitstoday.com

Why Relay Driver?

- Relay safely driven by ULN2003 IC
- Protect microcontroller from relay kick back using integrated clamping diodes.
- Has 7 high current Darlington arrays each containing 7 open collector Darlington pairs with common emitters.
- Supplies sufficient current for driving the relay.

Power Supply

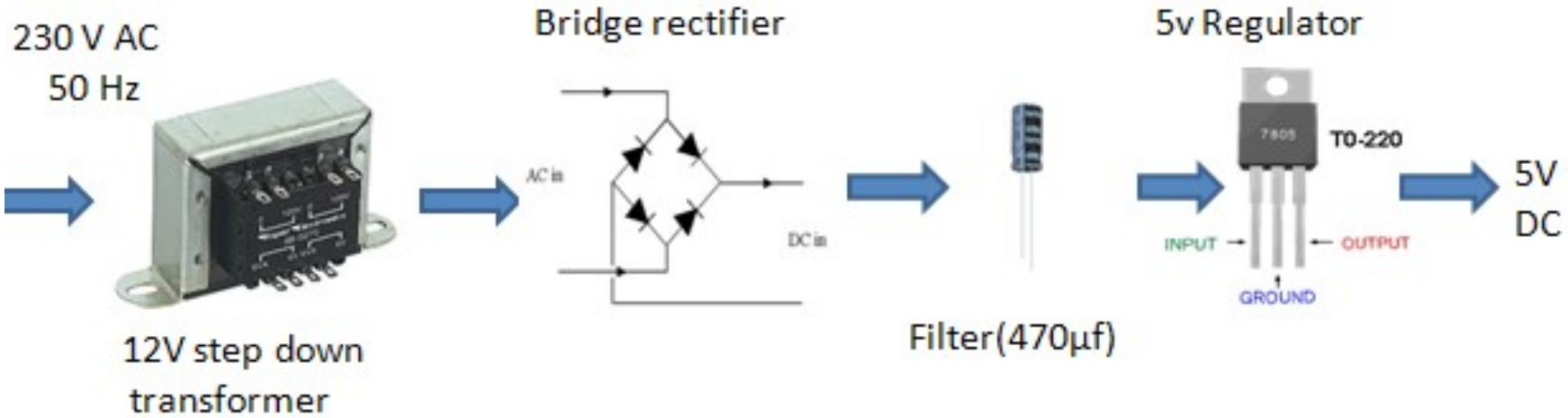

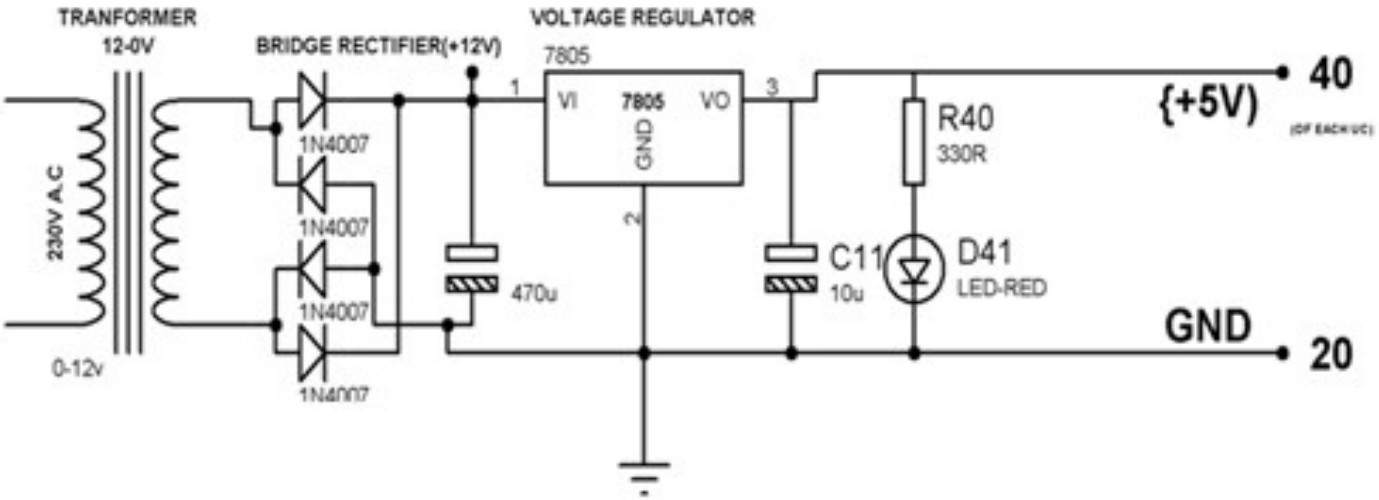

Advantages

- It is a robust and easy to use system.
- There is no need for extra training of that person who is using it.
- All the control would be in your hands by using this home automation system.
- One can control home appliances from anywhere.
- It reduces wastage of electricity if someone forgets to switch off any appliance connected to the system if we were away.
- It is very low cost compared to other technologies like GSM.

Disadvantages

- Lack of security. Anyone can control the appliances by connecting to the mobile connected to DTMF module.
- Number of appliances is limited as our mobile can generate only 16 tones.
- One mobile phone should always be connected to the system.

Future Work

- Memory can be used to store the appliance status during power failure.
- Appliance scheduler/timer can be implemented using RTC (Real Time Clock)
- Can be converted to an IoT device using WiFi connectivity.

Conclusion:

- DTMF Based Home Automation has been designed and setup
- It has been possible to control all home appliances automatically using our own mobile phones
- The control of all appliances is possible even from a wide range.

References

- www.atmel.com
- www.arduino.org
- www.beyondlogic.org
- www.wikipedia.org
- www.elementzonline.com
- www.elementztechblog.wordpress.com

Questions????

THANK YOU